H1600 Powder Shaker Manual

63" DTF Powder Shaker / Dryer — Operation and Maintenance

Models covered by this document

Model	CobraFlex SKU	Description
H1600 powder shaker (63")	CF-63-H1600VK-Dryer-Shaker	CobraFlex 63" DTF Dryer/Shaker — used with the 63" King Cobra printers
63" DTF Belt Powder Shaker Dryer	CF-63-Belt-Dryer-Shaker	Website listing of the same machine (bucketsofink.com and cobraflexprinters.com)

Document	User Manual
Revision	2026-11
Prepared by	CobraFlex Printers LLC, 906 S. Priest Drive, Suite 104, Tempe, Arizona 85281
Service	service@cobraflexprinters.com · (602) 930-1858
Based on	H1600 Powder Shaker manual, dated 2024-07-24 (manufacturer), summarized by CobraFlex Printers

The H1600 powder shaker applies and cures hot-melt powder for DTF (direct-to-film) printing. It combines pre-heating, top and front heating, air cooling, and an automatic powder circulation system in one unit.

CobraFlex Service and Support

Email: **service@cobraflexprinters.com** Phone: (602) 930-1858

Support hours: Monday–Friday, 8:00 AM–4:00 PM Arizona time

Need help? Submit a service ticket: https://cobraflexprinters.zohodesk.com/portal/en/newticket

You can also email service@cobraflexprinters.com (this link opens a pre-filled email for the CobraFlex 63" DTF Dryer/Shaker (H1600), SKU CF-63-H1600VK-Dryer-Shaker).

Please include your company name, the machine serial number, a description of the problem, and photos or a short video. For printers, also attach a current nozzle check print.

CobraFlex Printers LLC · 906 S. Priest Drive, Suite 104, Tempe, Arizona 85281 · cobraflexprinters.com



CobraFlex H1600 63" DTF belt powder shaker dryer

Overview

1. Pre-heating
2. Touch control panel
3. Top heating
4. Front heating
5. Air cooling
6. Roll take-up system
7. Built-in air purifier
8. Automatic powder circulation system

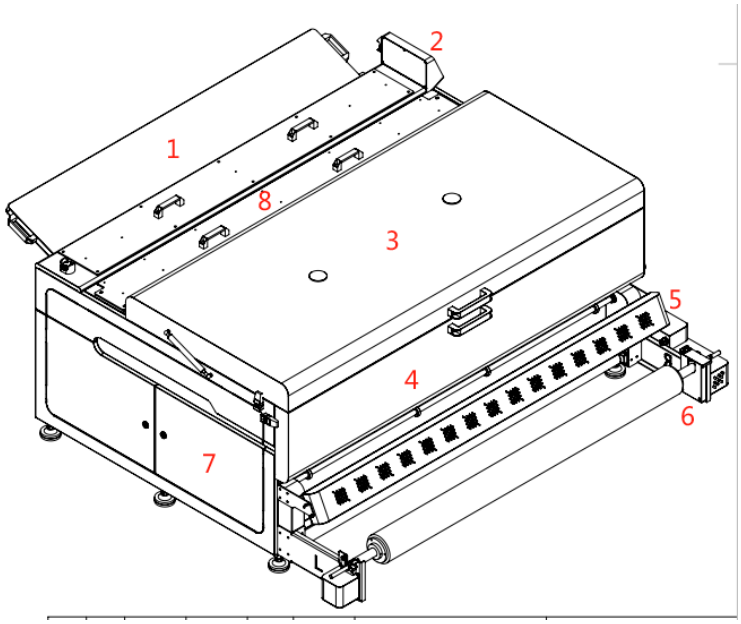

Component callouts 1–8 (numbers match the list above)

Instructions for Safe Use

Thank you for choosing this product. Please read these instructions carefully before operating the machine. The machine generates high temperatures during operation — do not touch the area marked with the "High Temperature" sign, to avoid burns. Follow every instruction marked with the caution symbol; improper operation may cause product damage or other losses.

Caution: Electrical hazard: the ground wire must be connected before you start the machine, or serious personal injury may result.

- The supply power must match the machine’s requirements, and the supply wire gauge must meet the rated requirements.
- Check that the power supply is connected to standard, with the neutral and live wires connected correctly.
- People who are sensitive to static electricity should take personal protective measures when operating the equipment.

Machine Specifications

Model	Rated voltage	Rated power	Net weight
H1600 Powder Shaker	220 V	10 kW	643 kg (1,418 lb)

Machine Size

Front elevation: overall width 2,160 mm (85.0 in), with a 1,970 mm (77.6 in) inner span. Side and top views show the key dimensions in millimeters (939, 472, 817, 967, 1,400, 1,786, and 2,090).

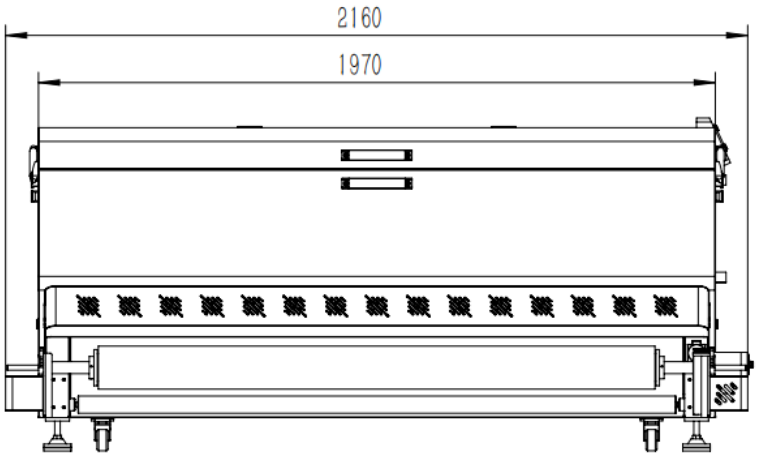

Front elevation (mm)

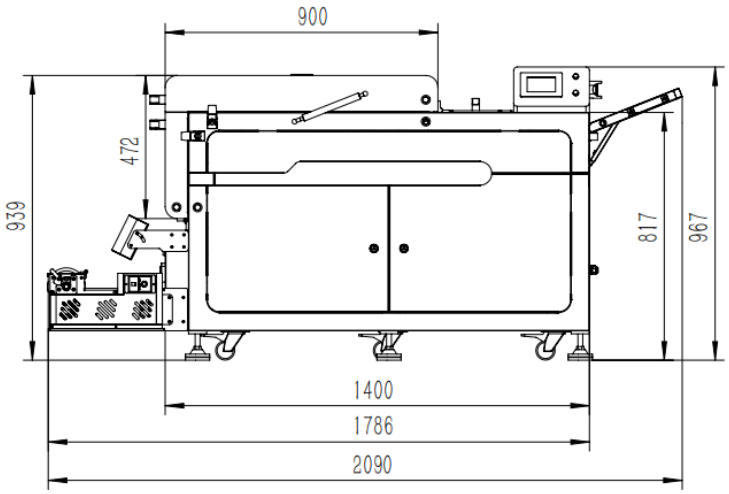

Side view (mm)

Material Feeding System

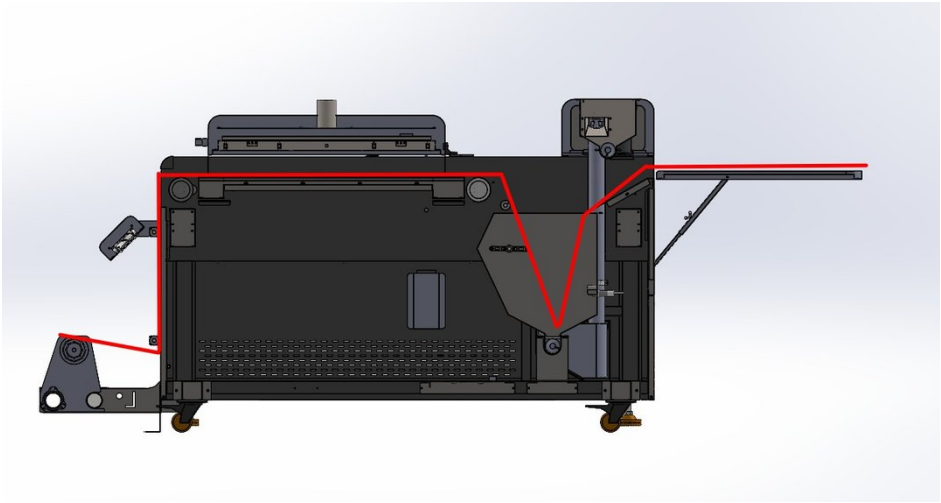

Film path through the machine (shown in red)

Touch Panel Controls

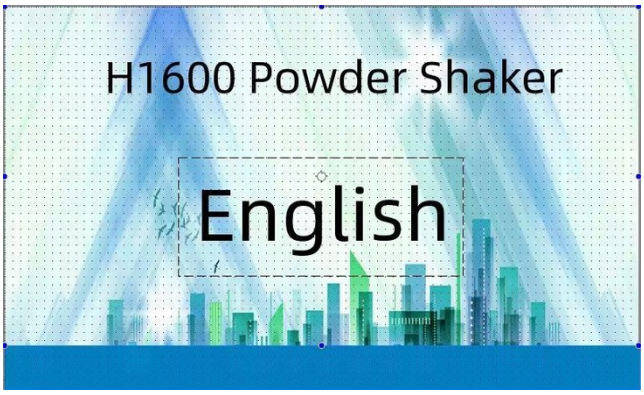

Start-up screen — select the language to continue

Screen 1 — Heating Controls

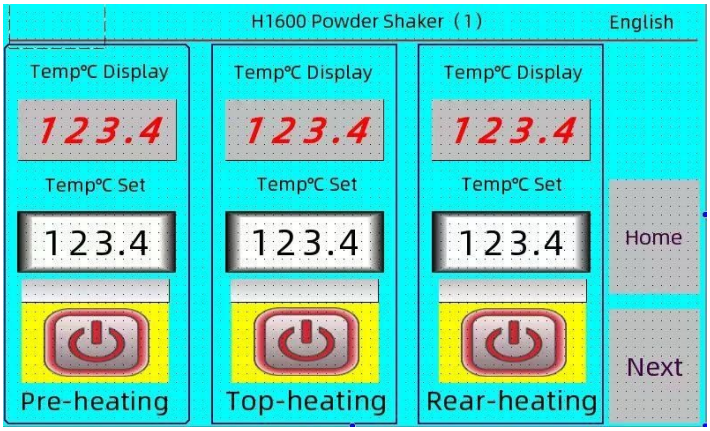

- **Home** returns to the main screen; **Next** goes to the next screen.
- Pre-heating control — recommended temperature 120 °C (248 °F); adjust to actual demand.
- Top-heating control — recommended temperature 120 °C (248 °F); adjust to actual demand.
- Rear-heating control — recommended temperature 50 °C (122 °F); adjust to actual demand.

Screen 2 — Powder Handling

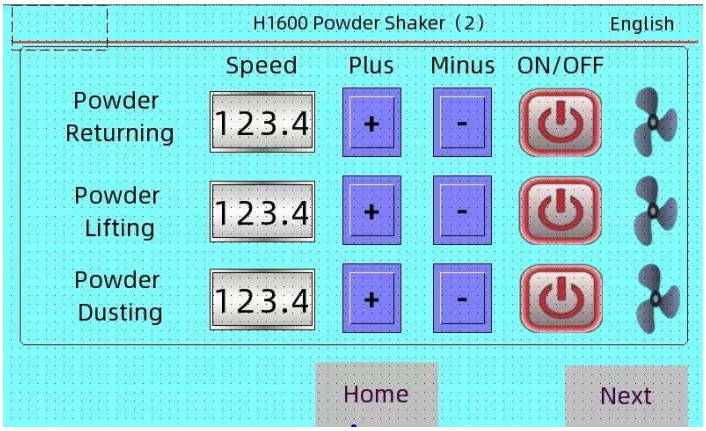

- Powder returning speed — recommended 80; adjust to actual demand.
- Powder lifting speed — recommended 100; adjust to actual demand.
- Powder dusting speed — recommended 80; adjust to actual demand.

Screen 3 — Motor Controls

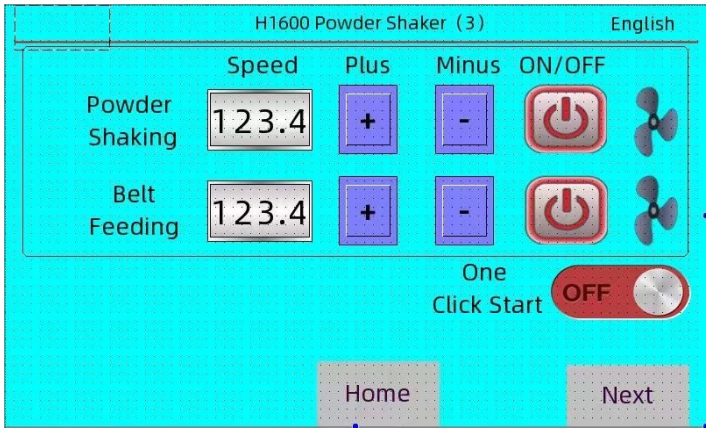

- Shaker motor (powder shaking) speed — recommended 20; adjust to actual demand.
- Conveyor (belt feeding) motor speed — recommended 50; adjust to actual demand.

Screen 4 — Auxiliary Systems

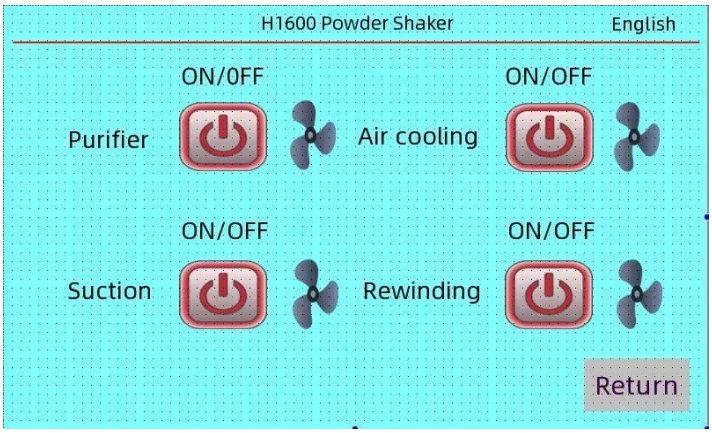

- Built-in air purifier on/off
- Air cooling on/off
- Platform suction on/off
- Take-up (rewinding) system on/off
- **Return** goes back to the previous screen.

Operating Procedure

1. Level the machine so it lines up correctly with the printer.
2. Turn on the machine’s main power.
3. Pre-heat the machine to the specified temperature.
4. Load the film according to the material path diagram.
5. Dry the print.
6. Finish printing.
7. Turn off the powder shaker’s heating system.
8. Keep the air purifier running for about 5 minutes to speed up cooling and fully purify the dust.
9. Turn off the machine’s main power.

Maintenance

Caution: Disconnect the external power supply before repairing or cleaning the machine.

- Clean the remaining powder out of the powder box at the end of each working day, and keep the interior dry.
- When the film has finished curing, turn off all heating switches first, then turn off the main switch.
- Before use, align the shaker with the printer platform to minimize off-center film when receiving prints.
- Do not place any loose objects around the powder box, to prevent contamination of the hot-melt powder.

Circuit Diagram

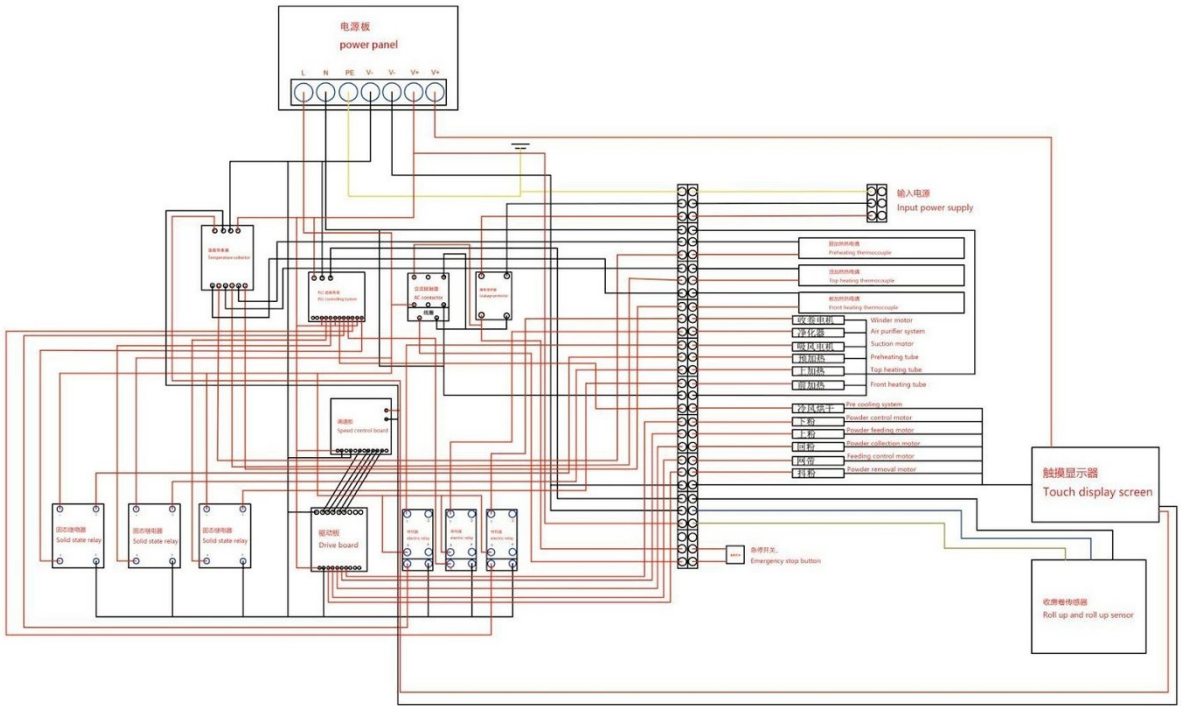

H1600\H650Pro 粉机简易维修电路示例图

Example diagram of simple maintenance circuit for H1600 \ H650Pro powder machine

Example maintenance circuit diagram for the H1600 / H650Pro powder machine

Proper Operating Environment

Set up the equipment in conditions that match the requirements below. Each requirement is taken from the CobraFlex documentation named in brackets. Operating outside the machine's site specifications is not covered by the warranty.

Requirement	Specification
Electrical power	220 V, rated power 10 kW. The ground wire must be connected before starting. The supply must match the machine's requirements and the supply wire gauge must meet the rated requirements, with neutral and live wires connected correctly. [H1600 Powder Shaker manual]
Floor and space	Net weight 643 kg (1,418 lb). Overall width 2,160 mm (85.0 in); see Machine Size for the other dimensions. [H1600 Powder Shaker manual]
Level and alignment	Level the machine with the printer, and align it with the printer platform before use. [H1600 Powder Shaker manual]
Air quality and cleanliness	Use the built-in air purifier; keep it running for about 5 minutes after heating is turned off. Clean out remaining powder daily, keep the interior dry, and keep loose objects away from the powder box. [H1600 Powder Shaker manual]
Static electricity	People sensitive to static electricity should take personal protective measures. [H1600 Powder Shaker manual]
Site and relocation	Site conditions must conform to the machine site specifications. Do not move the equipment without notifying CobraFlex or your dealer. [CobraFlex Warranty Terms and Conditions]

Warranty Summary

This is a summary of the CobraFlex Printers Warranty Terms and Conditions. The full terms are in the document *CobraFlex-CF-ALL-PRINTERS-DTF-UV-Printers-Warranty-Terms-and-Conditions-Rev2026-11.pdf* and online at https://cobraflexprinters.com/policies/terms-of-service; the full terms govern if anything here differs. CobraFlex Printers may change the warranty at any time.

- The CobraFlex Limited Warranty covers defects in material and workmanship under normal use and service for a period of one (1) or two (2) years, depending on the model and purchase agreement, from the original date of purchase, excluding wear-and-tear items and consumable parts. It is non-transferable and applies only to the customer who purchased directly from CobraFlex or an authorized CobraFlex dealer.
- Service support is remote (phone and virtual). On-site service and travel expenses are not covered. Support hours are Monday–Friday, 8:00 AM–4:00 PM Arizona time.
- Not covered: damage from accident, misuse, abuse, neglect, fire or water damage, electrical disturbances, loss or damage in transit, improper site preparation, operation outside the product specifications, and unauthorized modification, maintenance or repair.
- Training: CobraFlex or its dealers provide training on proper operation and maintenance. Operators who are not properly trained are not covered.
- Moving the equipment without notifying CobraFlex or its dealer voids the warranty.
- It is the customer's responsibility to return parts to CobraFlex safely; parts damaged in shipping due to inadequate packing are not covered.

CobraFlex Service and Support

Email: **service@cobraflexprinters.com** Phone: (602) 930-1858

Support hours: Monday–Friday, 8:00 AM–4:00 PM Arizona time

Need help? Submit a service ticket: https://cobraflexprinters.zohodesk.com/portal/en/newticket

You can also email service@cobraflexprinters.com (this link opens a pre-filled email for the CobraFlex 63" DTF Dryer/Shaker (H1600), SKU CF-63-H1600VK-Dryer-Shaker).

Please include your company name, the machine serial number, a description of the problem, and photos or a short video. For printers, also attach a current nozzle check print.

CobraFlex Printers LLC · 906 S. Priest Drive, Suite 104, Tempe, Arizona 85281 · cobraflexprinters.com